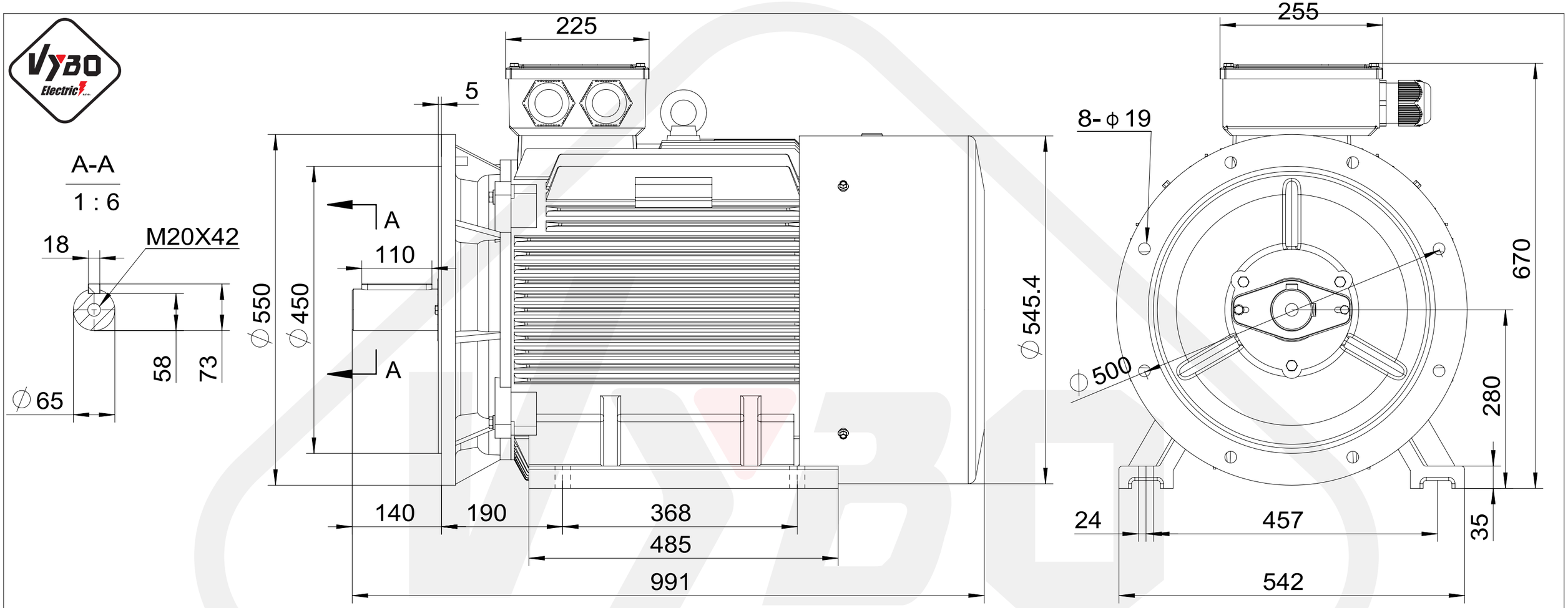

1LC-280S-B35

Mounting diagram