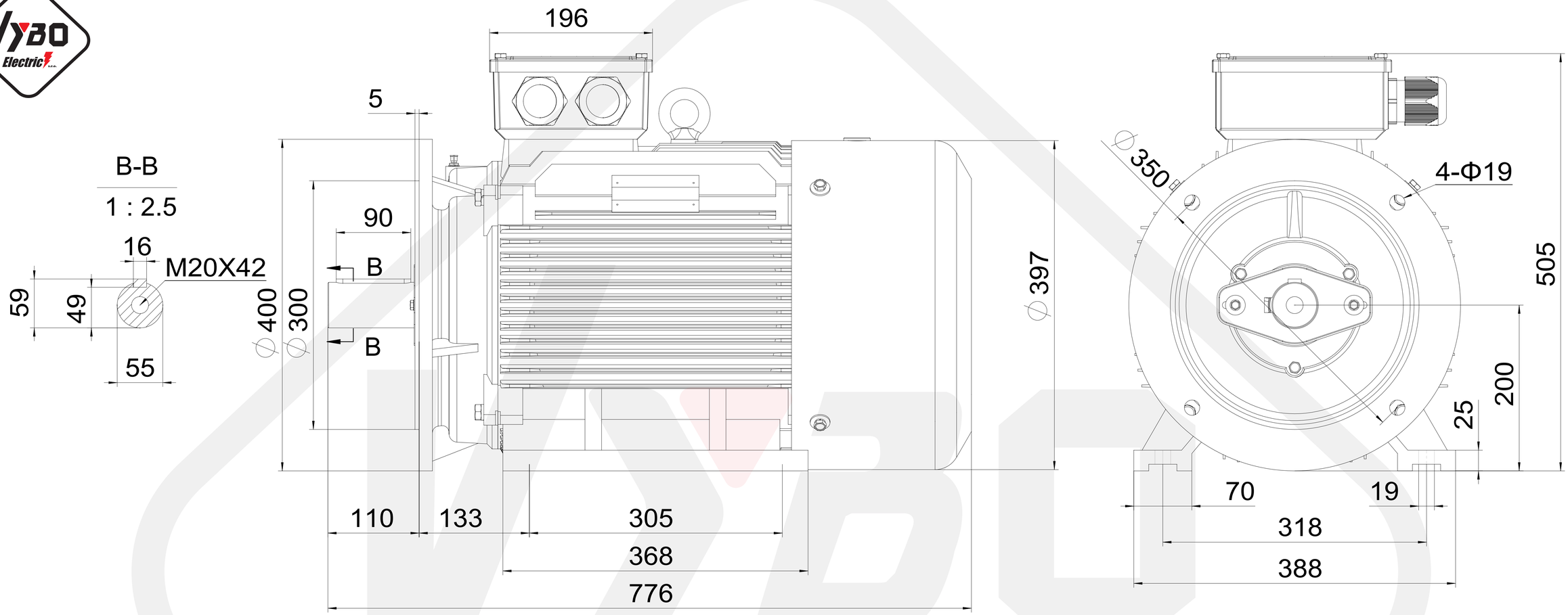

1LC-200L-B35
Mounting diagram