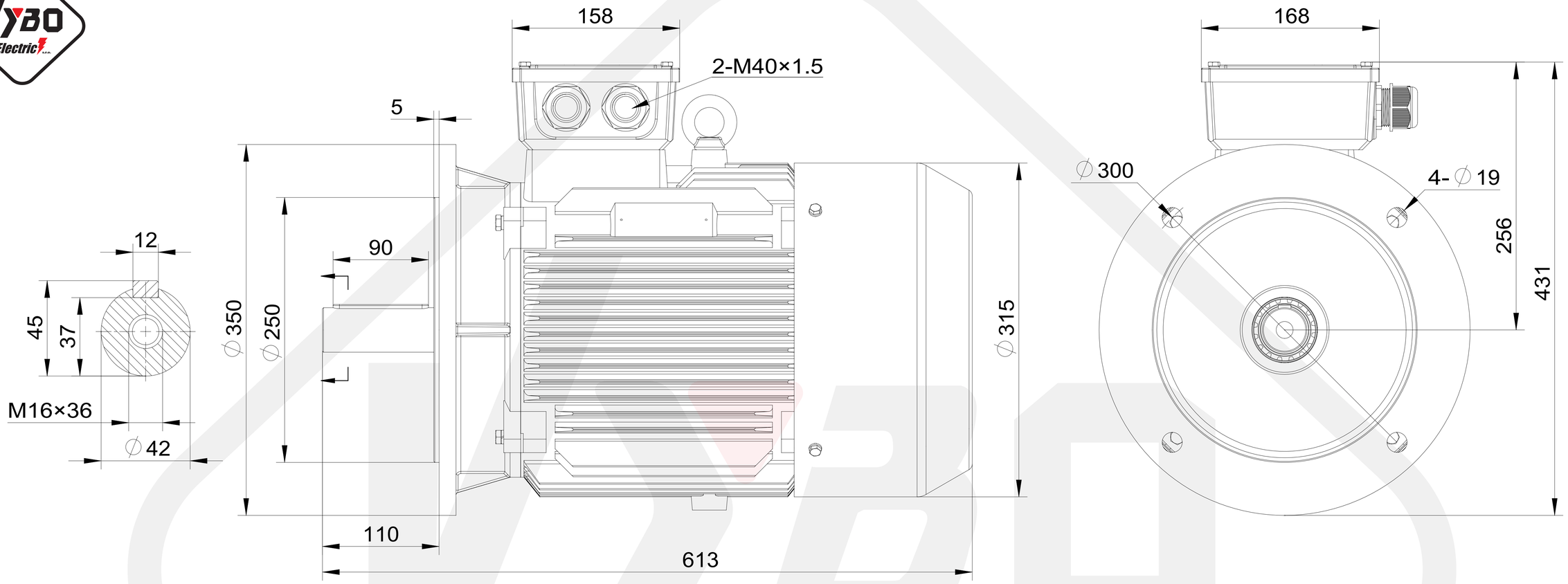

1LC-160M-B5
Mounting diagram