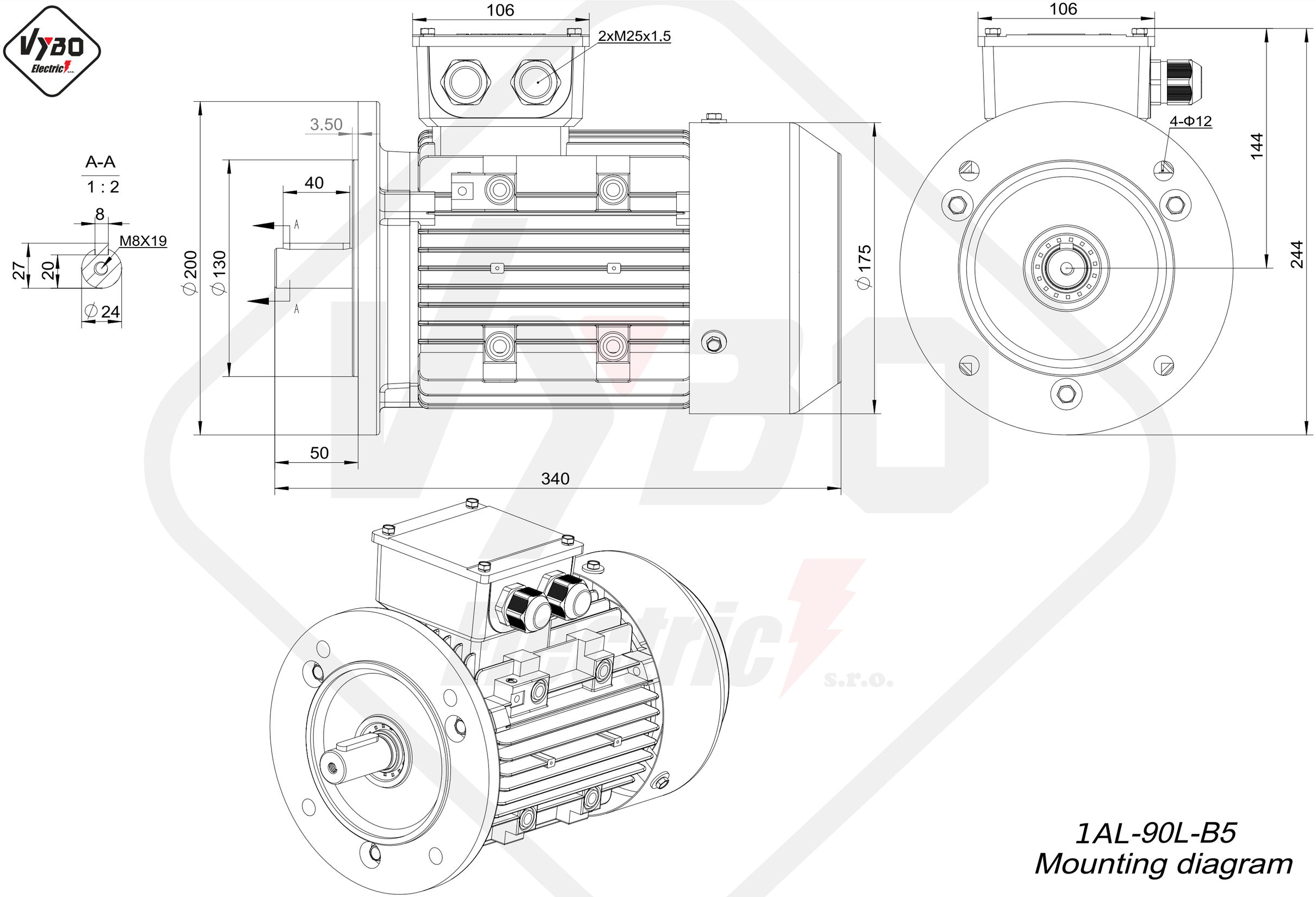

1AL-90L-B5
Mounting diagram