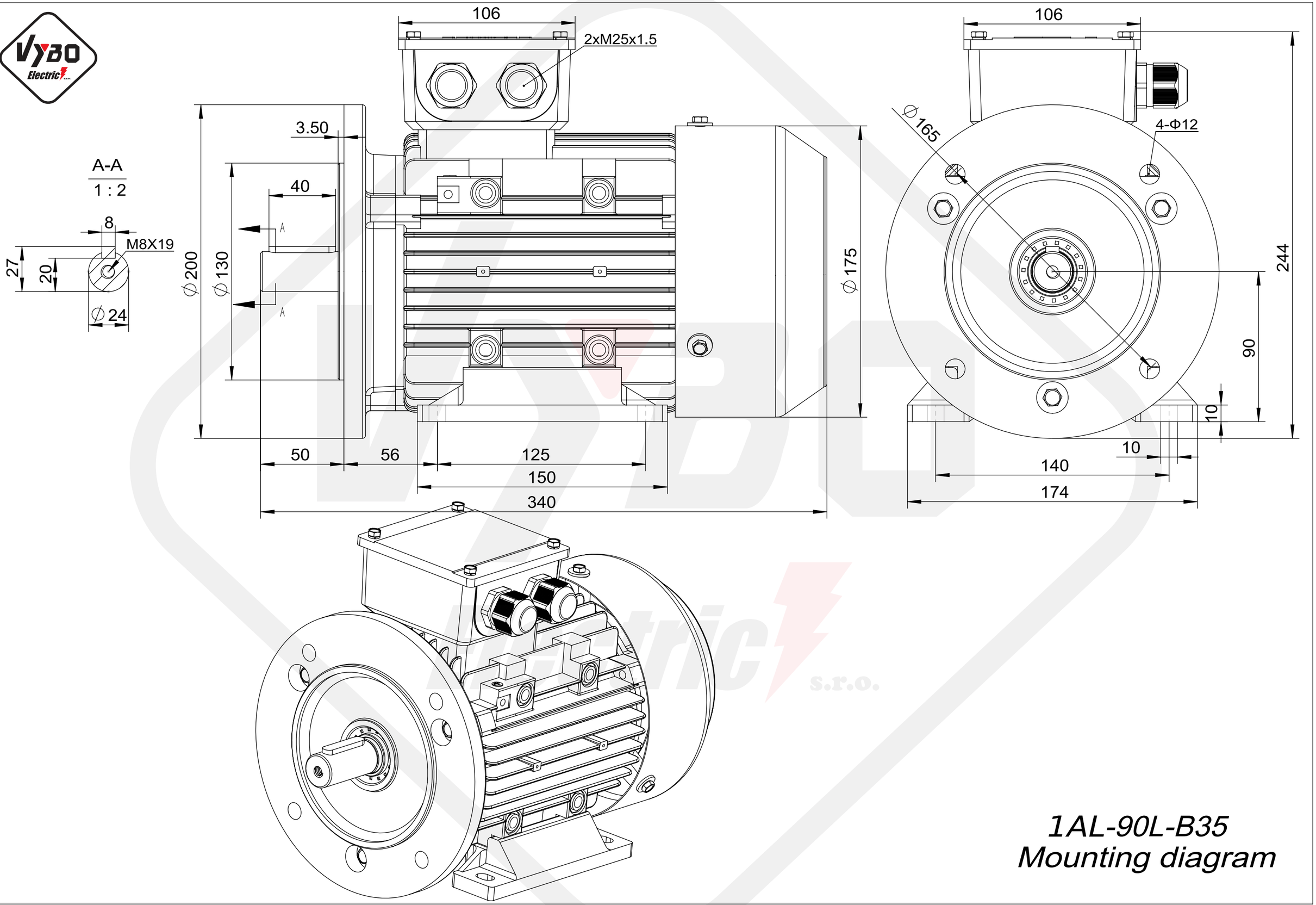

1AL-90L-B35
Mounting diagram