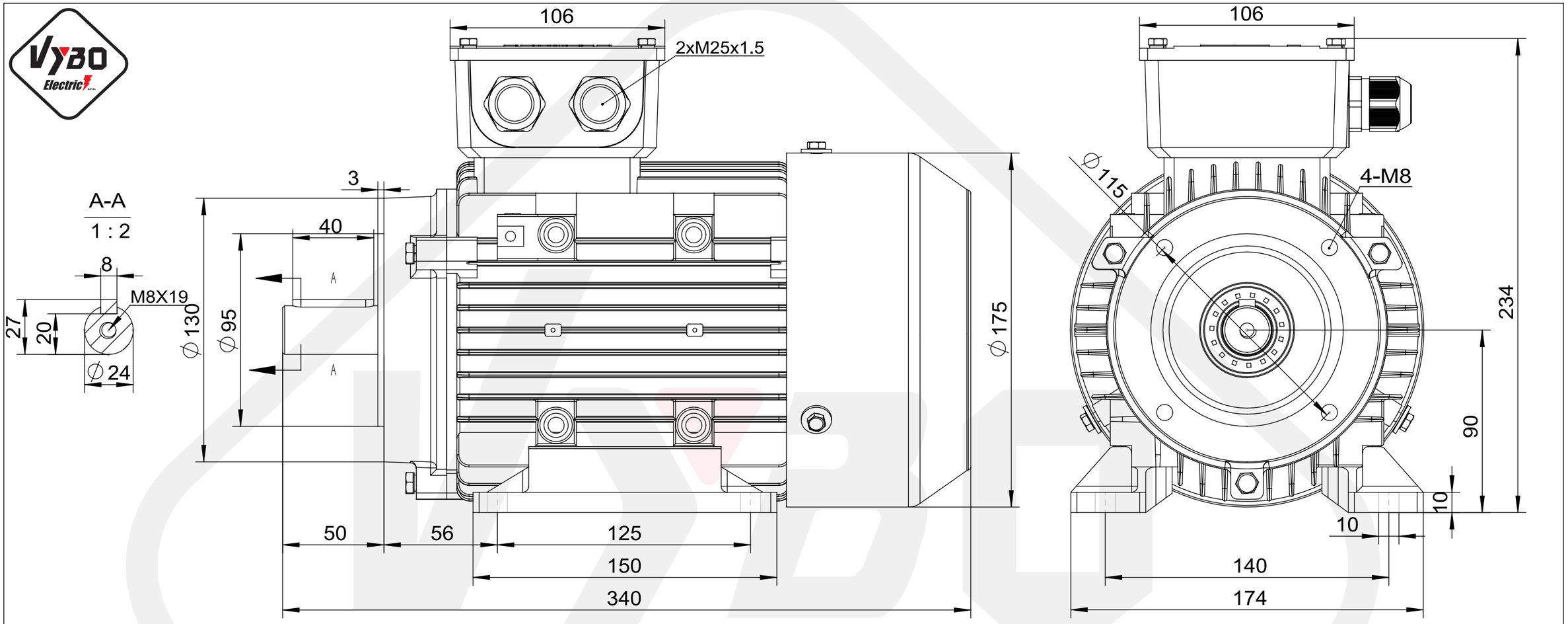


*1AL-90L-B34*
*Mounting diagram*