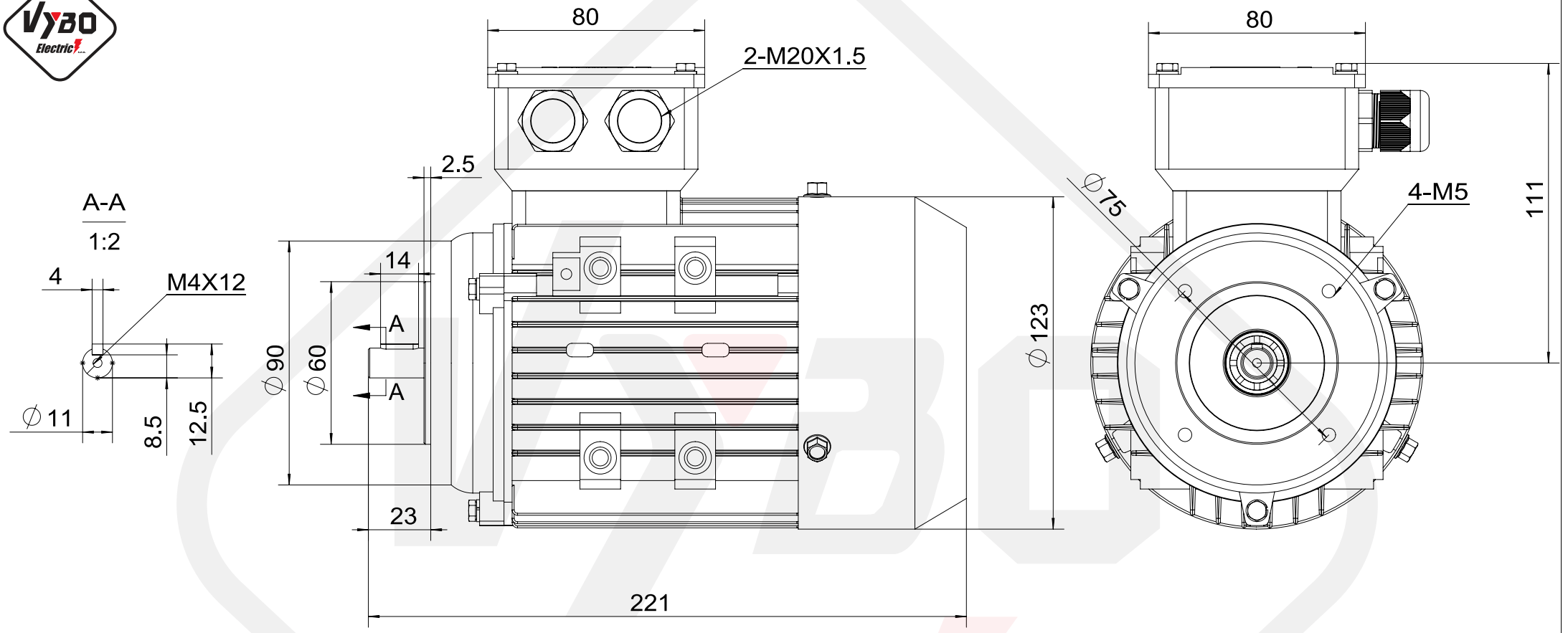

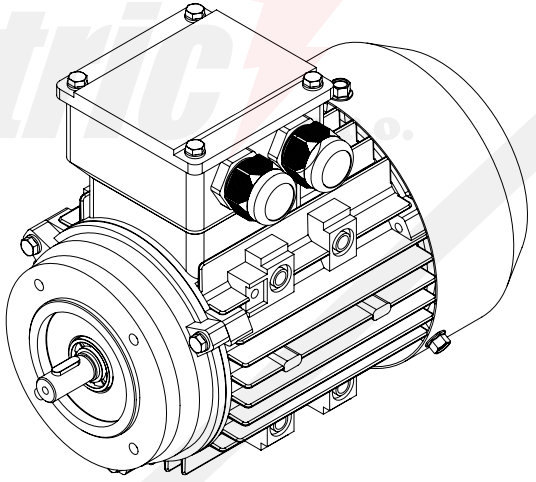

1AL-63-B14

Mounting diagram