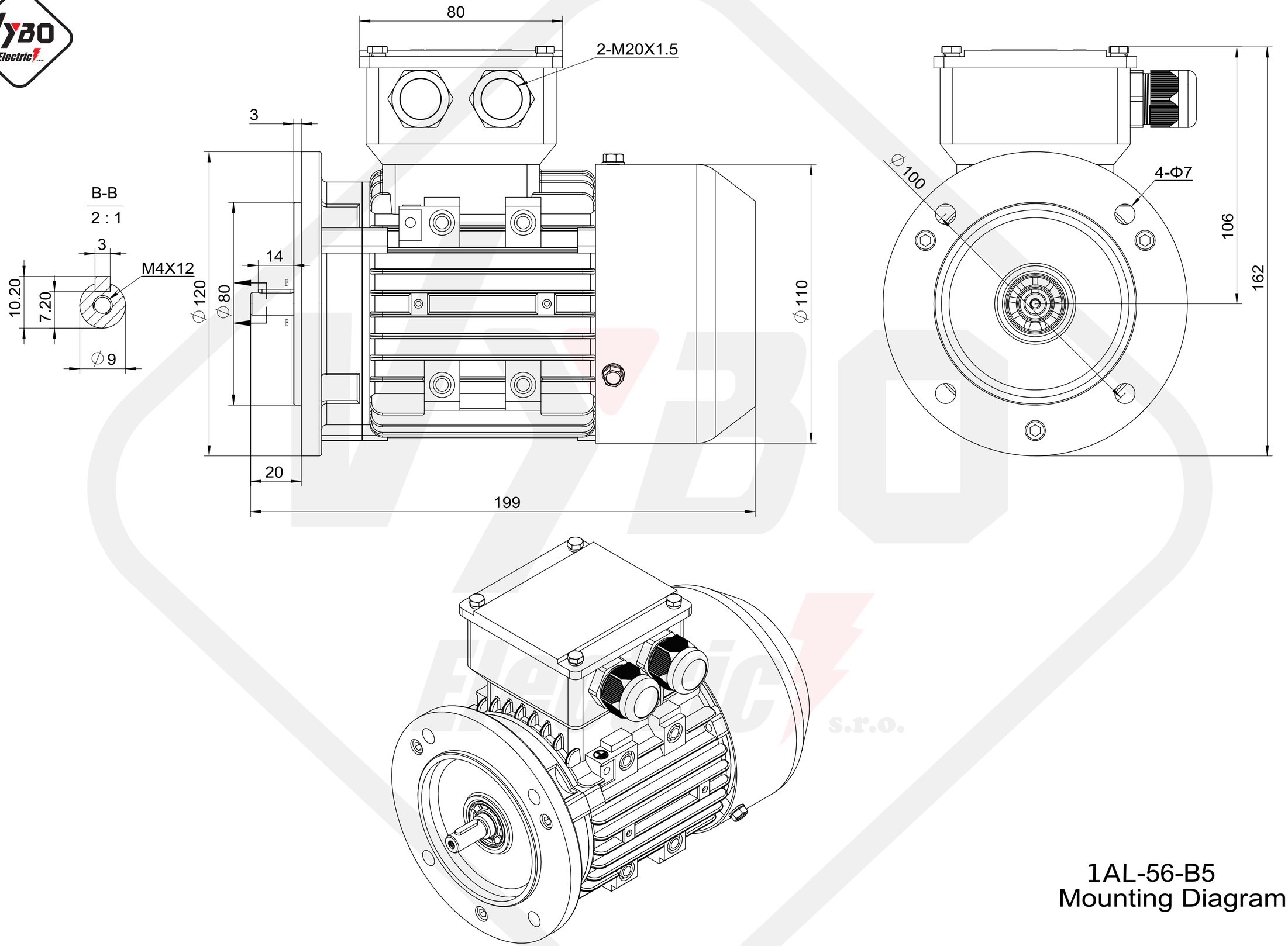

1AL-56-B5
Mounting Diagram