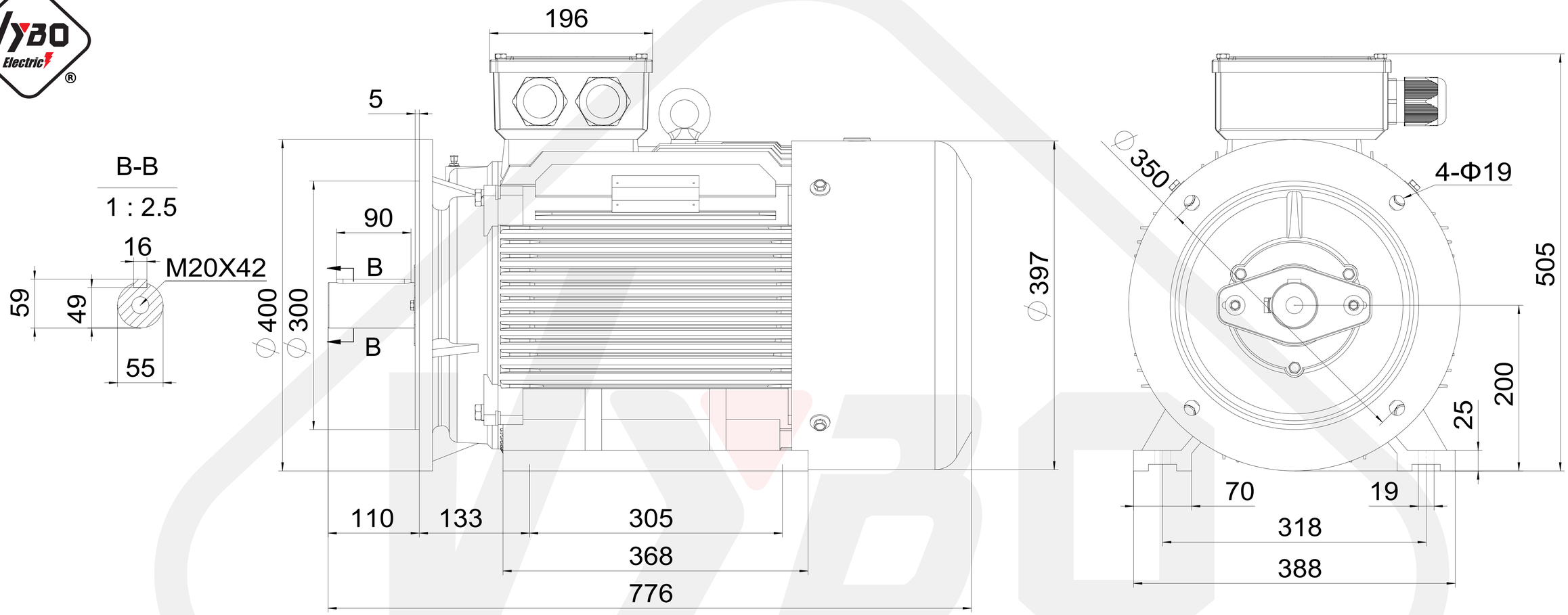

3LCZ-200L-B35
Mounting diagram